POWERGUARD

3000W Power Station

with expansion port

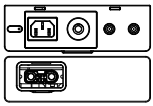

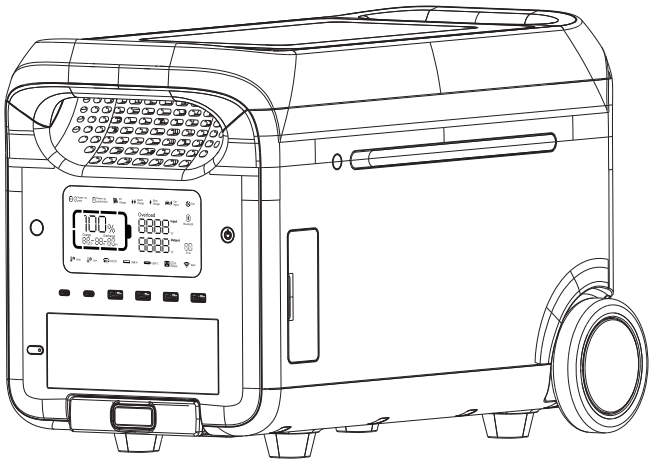

Portable

User Manual

PGPS3000

Content

1. Parameters 1

2. Safety guidelines

2.1 Warning 2

2.2 Discard 3

3. Guideline for users

3.1 Product overview 4

3.2 LCD screen 6

3.3 Use 6

3.4 AC charging 8

3.5 PV charging 9

3.6 Car charging 10

3.7 Battery expansion 10

3.8 APP 13

3.9 UPS function 13

3.10 Anti-slip gloves 14

4. FAQs (Frequently Asked Questions) 14

5. Error messages & solutions 15

6. What’ s in the box 17

7. Maintenance 17

8. Disclaimer 18

1. Parameters

General

Net weight	≈34kg (≈75lbs)
Dimension	536*303*343mm (21*12*13.5in)
Battery capacity	2560Wh, 51.2V⎓ , 50Ah
Wi-Fi	supported

Output

(EU/FR/AU/ZA)

AC socket x3 (Inverter mode)	Pure sine-wave, total 3000W (peak 5000W), 220-240V~, 50Hz/60Hz, 16A
AC socket (Bypass mode)	220-240V~, 50Hz/60Hz, 2300W Max., 10A Max.

(UK)

AC socket x3 (Inverter mode)	Pure sine-wave, total 3000W (peak5000W), 220-240V~, 50Hz/60Hz, 13A
AC socket (Bypass mode)	220-240V~, 50Hz/60Hz, 2300W Max., 10A Max.

(US)

AC socket x4 (Inverter mode)	Pure sine-wave, total 3000W (peak5000W) AC output (x3): 100-120V~, 60Hz, 20A, 2400W AC output (x1): 100-120V~, 60Hz, 25A, 3000W
AC socket (Bypass mode)	100-120V~, 60Hz, 1800W Max., 15A Max.

USB-A1/A2	5V⎓ 3A, 9V⎓ 2A, 12V⎓ 1.5A, 18W Max.
USB-A3/A4	5V⎓ 2.4A, 12W Max.
USB-C1/C2	5/9/12/15V⎓ 3A, 20V⎓ 5A, 100W Max.
Anderson terminal output	12.6V⎓ 30A max., 378W Max.
Car charger	12.6V⎓ 10A, 126W Max.
DC5521 output x2	12.6V⎓ 3A

* Car charge and DC5521 share power, 126W Max.
* Inverter mode: the output AC power comes from the battery, not the grid.
* Bypass mode: the output AC power comes from the grid, not the battery.

Input

(UK/EU/FR/AU/ZA)

AC input power	2300W Max., 10A
AC input voltage	220-240V~, 50Hz/60Hz

(US)

AC input power	1800W Max., 15A
AC input voltage	100-120V~, 60Hz

PV charge x2	800W Max., 13-45V ⎓ 12A
Car charging input	12V/24V battery supported, 8A by default

Input charging

(UK/EU/FR/AU/ZA)

AC charging power	2100W Max.

(US)

AC charging power	1800W Max.

PV / Car charging power x2	800W Max.
AC+PV charging power	2688W Max.

Battery

Cell Type	lithium iron phosphate battery ($LiFePO_4$)
Life cycle	4000 cycles
Protection type	over temperature protection, low temperature protection, over discharge protection, over charge protection, over load protection, short circuit protection, over current protection

*Test conditions：95% DOD, 0.5C charge & 1.0C discharge at +25±3°C.

Operating temperature

Optimal operating temperature	20°C~30°C (68°F~86°F)
Discharge temperature range	-20°C~45°C (-4°F~113°F)
Charge temperature range	0°C~45°C (32°F~113°F)
Storage ambient temperature	-20°C~45°C (20°C~30°C preferred) [-4°F~113°F(68°F~86°F preferred)]

*Whether the product can be charged or discharged is subject to the actual battery pack temperature.

Battery expansion

Power input/output	40-58.8V⎓ 50A charge (Max.), 70A discharge (Max.)
Nominal energy	2560Wh, support 6 expansion battery packs at most, separate selling.

2. Safety guidelines

2.1 Warning

1. Do not let a working power station be close to the heat source, such as fire or heater.

2. Do not make power station contact with any liquid.

3. Do not use power station in a strong electrostatic or strong magnetic field environment.

4. Do not disassemble power station in any way or pierce it with a sharp object.

5. Do not short power station by wire or other metal objects.

6. It is forbidden to step on, sit or climb on this product.

7. Do not use ingenuine parts or accessories. For part or accessory replacement, please visit official sales channel for purchase information.

8. When using power station, please follow the operating temperature defined in this user manual strictly. If the temperature is too high, battery may catch fire or even explode. If the temperature is too low, power station performance will be seriously impaired, even normal use will be impacted.

9. Please do not put other heavy objects on the outdoor power supply except the expansion battery pack; the stacking method of the expansion battery pack has been designed and tested by structural mechanics. For the stacking method of the expansion battery pack, please refer to the chapter 3.7 of this user manual.

10. Do not stop the fan by force or expose power station in an unventilated or dusty environment when it is working.

11. Please avoid collision, drop, and violent vibration. If severe impact happens, shut down the power supply immediately. Please fix power station firmly during transportation to avoid vibration and impact.

12. If power station falls into water accidentally, place it in a safe and wide area, and keep yourself away from it until it' s dry. Dried product shall not be used again. Dispose it properly according to chapter 2.2 in this user manual. If power station is on fire, please use fire extinguishing equipment in the recommended order: water or water mist, sand, fire blanket, dry powder, dioxide carbon fire extinguisher.

13. If there is dirt, use a dry cloth to wipe it.

14. Place power station carefully to prevent damage. If power station is tipped over and seriously damaged, turn off power station immediately and place the battery in a spacious place and keep it away from flammable materials and people, and scrap it in accordance with the requirements of local laws and regulations.

15. Keep power station out of the reach of children and pets.

16. Keep power station in a dry and ventilated place.

17. In humid environment (seaside, water, etc.), it is recommended to equip power station with moisture-proof bag. If water is found inside product, do not use/start it again. Please take countermeasures to prevent electric shock before touching power station. Put it in a safe and waterproof open area, and contact customer service immediately.

18. It is not recommended to use power station to supply power for safety-related emergency medical equipment, including but not limited to medical grade breathing machine (hospital version CPAP: Continuous Positive Airway Pressure), artificial lung (ECMO, Extracorporeal Membrane Oxygenation). It can be used to supply power for home version CPAP at home and does not require continuous professional monitoring. Please follow your doctor's advice and consult the manufacturer for any restrictions on the use of the device. For general medical equipment, please pay attention to the power condition to ensure that power does not run out.

19. Power supplies will inevitably generate electromagnetic fields when it is in use, which might affect the implantable medical device or normal operation of personal medical device, such as pacemaker devices, cochlear implants, hearing AIDS, defibrillators, etc. If any of these medical devices are used, please consult the manufacturer about the restrictions on the use to ensure that power station is operated at a safe distance from implanted medical devices such as pacemakers, cochlear implants, hearing AIDS, defibrillators, etc.

20. When the power station is connected to a refrigerator, it may automatically shut down because of the power fluctuation property of the refrigerator. When connecting the power supply to a refrigerator that stores medicine, vaccines or other valuable items, it is recommended to set the AC output to "Never off" in the APP, so as to ensure continuous power. Users should pay attention to power consumption.

21. During the push-pull movement of this product, it is forbidden to put other items on this product.

2.2 Discard

1. Conditions permitting, be sure to discharge the battery completely, and then put power station in the specified battery recycling bin. Power station contains batteries, which are dangerous. It is strictly prohibited to discard them in ordinary dust bins. For details, follow local laws and regulations on battery recycling and disposal.

2. If the battery cannot be discharged completely due to product failure, do not discard the battery directly in the battery recycling bin. Contact a professional battery recycling company for further disposal.

3. The battery will not start after over discharge. Please dispose it as discarded.

3. Guideline for users

3.1 Product overview

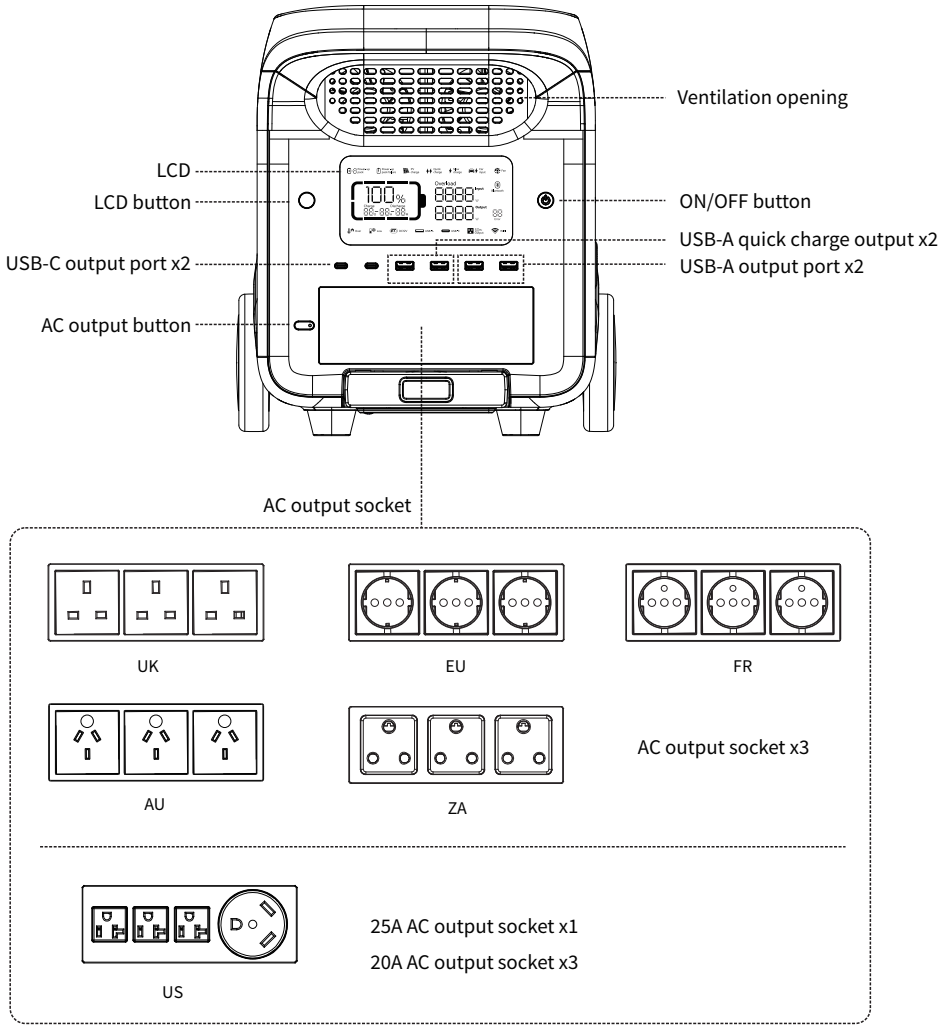

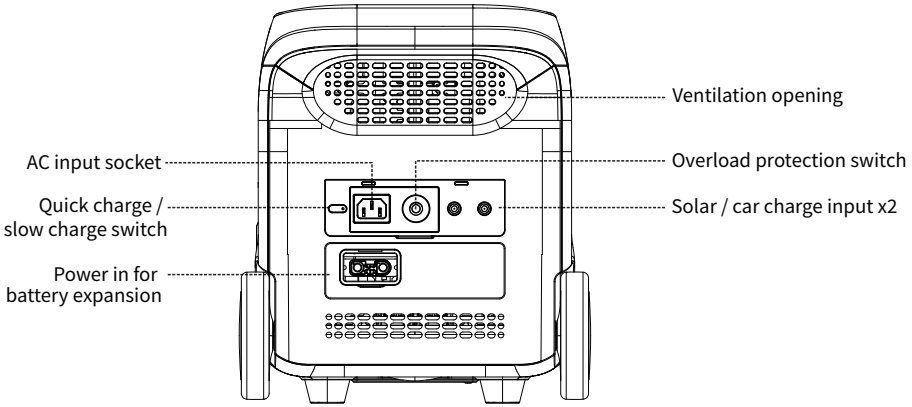

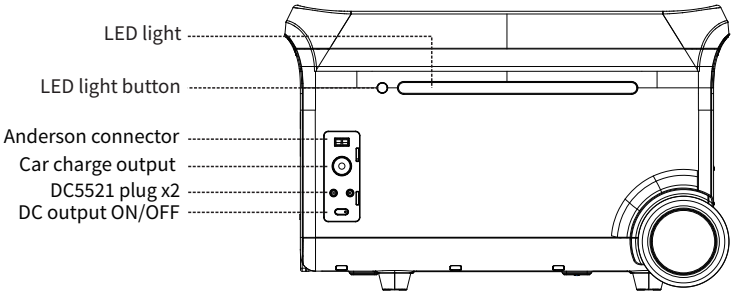

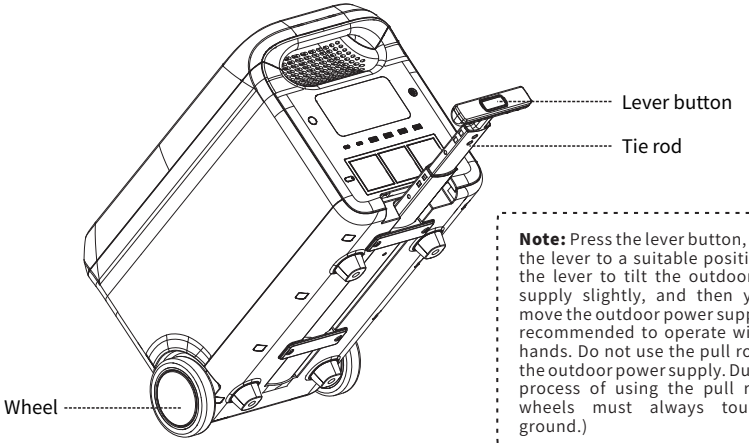

Note: Press the lever button, pull out the lever to a suitable position, pull the lever to tilt the outdoor power supply slightly, and then you can move the outdoor power supply. (It is recommended to operate with both hands. Do not use the pull rod to lift the outdoor power supply. During the process of using the pull rod, the wheels must always touch the ground.)

3.2 LCD screen

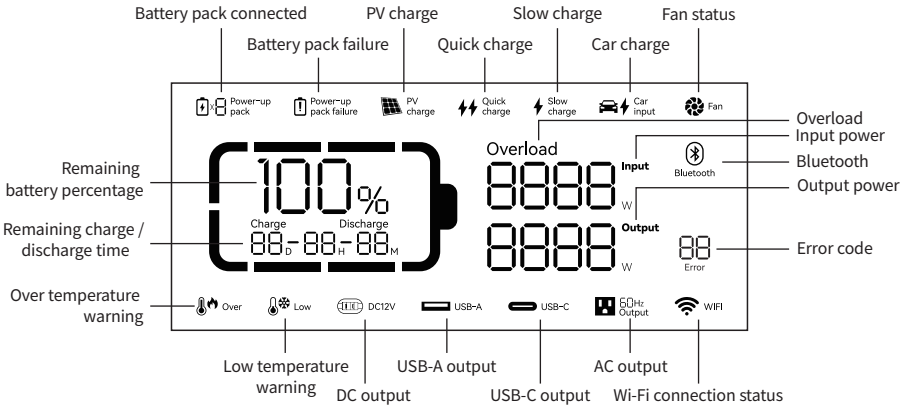

Battery capacity: When power station is being charged, SOC icon will flicker.

Wi-Fi connection status: When wifi reset, wifi icon will flash for 3s, wifi icon light up when wifi link, wifi icon go out when wifi disconnect.

Bluetooth connection status: The Bluetooth icon lights up when this product is matched wirelessly. The Bluetooth icon lights up when the Bluetooth link is successful. Bluetooth icon goes out when Bluetooth is disconnected.

* Please refer to clause 5 for more details regarding error message.

3.3 Use

Note: Long press the ON/OFF button to turn off the machine and clear the fault information.

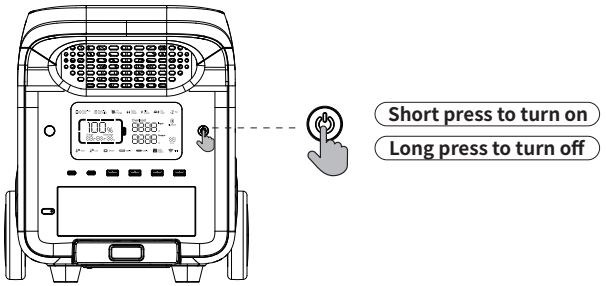

On and off

• Press the main power switch to turn on the device, then the screen will be lit and the main power indicator light will light up.

• When this product lasts for 5 minutes without any operation, the LCD display will be automatically extinguished. When this product is plugged in and unplugged from mains, pv, car charger or key operation, the LCD display will be lit up automatically. To turn the LCD display on or off, press the display control button.

• Press and hold the main power switch will turn off power station.

• In the normal mode (the power is above 5%), the default standby time of this product is 2 hours; when the AC output switch is not turned on, and there is no charge or discharge for 2 hours, the product will automatically shut down, and the standby time can be Set it on the APP; when the power is 5% or below, the product will be forced to enter the low power mode. In the case of no charge or discharge, the product will adjust the standby time according to the power and automatically shut down.

• In normal mode, long press the LED light button to exit the automatic shutdown setting, and the battery icon on the screen will flash. Long press again to enter the automatic shutdown setting, and the battery icon does not flash. (The automatic shutdown setting is to protect the battery from low power, exiting this setting may damage the battery life, please use it with caution.)

Note: When no AC input, long press the above AC output button, you can switch the AC off-grid output frequency (50Hz Output / 60Hz Output), long press 2s to switch, the AC output icon will flash 3 times after successful switching.

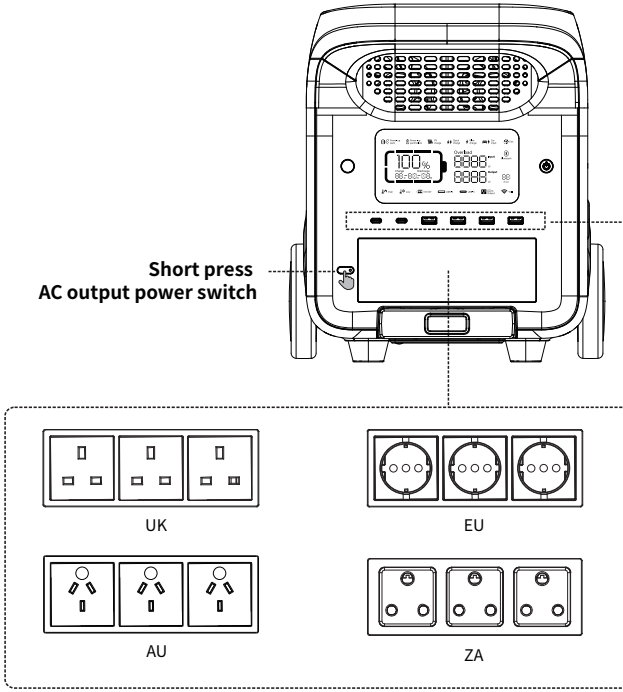

USB output

• USB output is enabled by default after the main power switch is turned on.

AC output

• After ensuring that the main power is turned on, short press the AC output power switch to turn on the AC output. Short press the AC output power switch again to turn it off.

• The default standby time of the AC output port is 1 hour. After 1 hour without any load on the AC output port of this product, the AC output power will be automatically turned off. In normal mode, long press the LED light button, the AC output power switch can exit the automatic shutdown setting, and the battery icon on the screen will flash. Long press again, the AC output power switch enters the automatic shutdown setting, and the battery icon does not flash.

• Long press the LED light button to exit the AC automatic shutdown setting: it is applicable to AC equipment below 10W and pulse working equipment.

• When the AC output is not in use, turn it off to save power consumption.

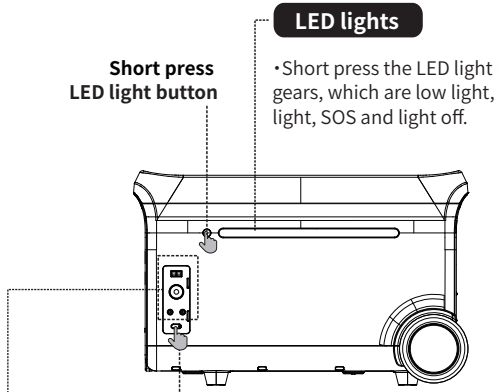

• After the main power switch is turned on, press the 12V DC output power switch to enable the DC output port.

• Press the 12V DC output power switch again to turn it off.

3.4 AC charging

Quick charging technology is designed for AC charging. You can control the charging power via the AC charging speed switch. The slow charge mode is on by default when power station is turned on, and can be switched to quick charge mode by the button. Quick and slow charging mode switching can also be set by APP. If the current is continuously higher than 20A, the charging input port will start the self-protection function, and the charging overload protection switch will automatically trip. Press the charge overload protection switch to restore charging after confirming no fault.

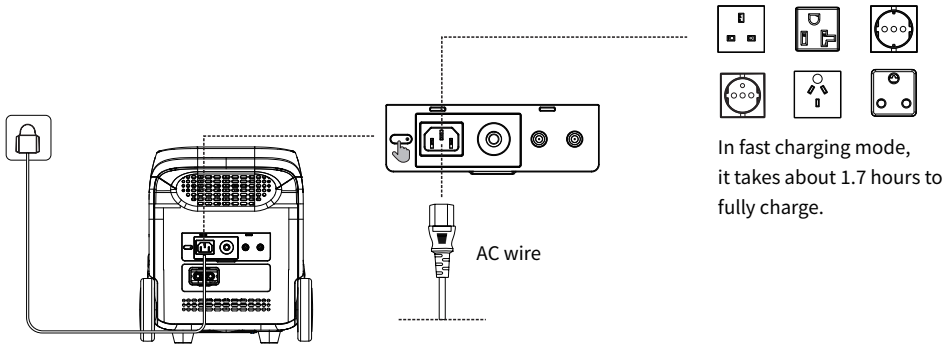

In fast charging mode, it takes about 1.7 hours to fully charge.

Quick charge and slow charge can be switched by the button.

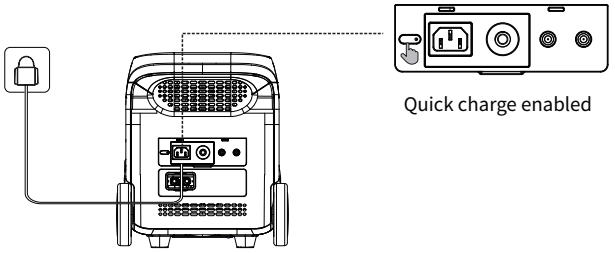

The charging power range can be adjusted by APP.

Please use the standard AC charging Cable for fast charging. AC Charging Cable should directly plug into 10A (or above) wall-mounted socket. We take no responsibilities for any damage caused by using unofficial AC charging cable, and other failures to follow instructions.

Note: When charging through US Specification Power station AC, please use the official standard AC charging cable for charging, the AC charging cable plug needs to be directly connected to the wall plug that supports more than 15A current, the company does not assume any responsibility for the damage caused by the use of other unofficial charging cables and failure to operate according to specifications.

3.5 PV charging

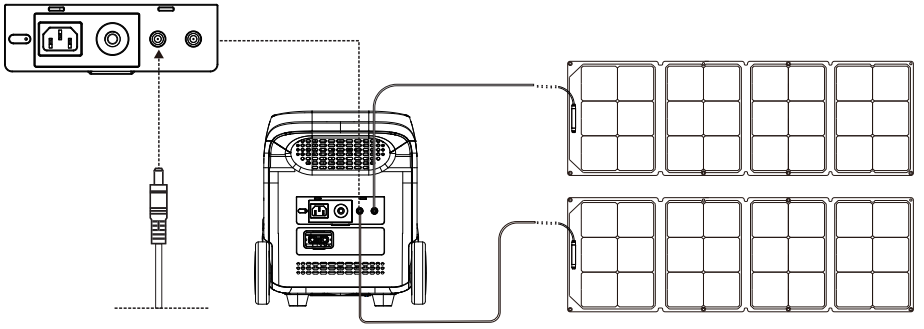

Users can use solar panels to charge power station as shown in the picture.

Dual solar panels supported.

***Solar charging cable (DC7909)**

• Please follow the user manual to connect the solar panels.

• Before connecting the solar panel, check whether its output voltage is within power station specifications to avoid damage to power station.

*The interface of this product is DC7909. If you need an adapter cable from MC4 to DC7909, please purchase it yourself.

3.6 Car charging

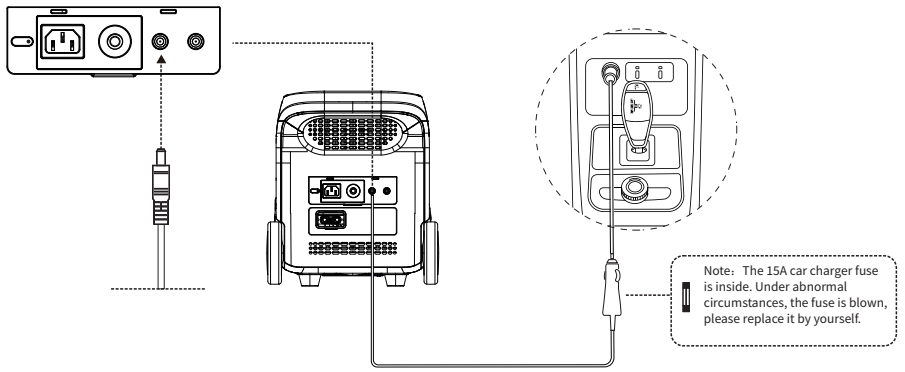

***Car charger cable (DC7909)**

Power station can be charged by a car charging port. It should be charged after the car starts, so as to avoid the car battery loss and failure to start. At the same time, ensure good connection between the car charging port and cigarette lighter. We take no responsibilities for any loss caused by improper operation.

3.7 Battery expansion

Power station supports connection with 6 expansion battery packs at the same time for larger capacity. Please refer to the user manual of battery pack for details.

Notes

1. Before connecting the battery pack, please make sure both power station and battery pack are off.

2. After the battery pack is connected, check if battery icon is shown in the displays of both power station and battery pack.

3. While in charging, please do not connect or remove the battery pack. If connection or need to connect or remove it, turn off power station prior to operation.

4. Please do not touch the metal terminals. If there is foreign matter on the metal terminals, clean it with a dry cloth gently and carefully.

Parallel mode of 1 power station and 1 expansion battery pack:

❶ Turn off the power station and expansion battery pack.

❷ Plug one end of the cable to expansion port of power station, the other end to Power Output of battery pack.

❸ After parallelization, press power button ⏻ of power station to enable the power station and battery pack to show current capacity. The power station shows the paralleled quantity, and capacity is expanded.

❹ After parallelization, connect ports of the power station for charging or discharging (refer to clause 3.3, 3.4, 3.5 and 3.6).

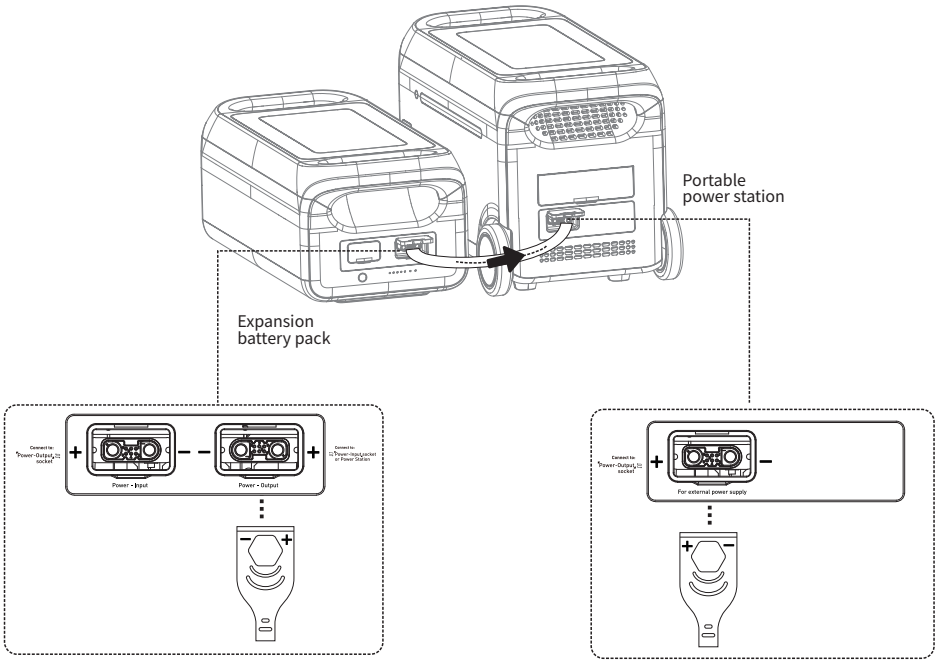

Remark: There are + and – symbols on battery packs and cables in case of reverse polarities.

Parallel mode of 1 power station and multiple expansion battery packs:

❶ Turn off the power station and expansion battery packs.

❷ Plug one end of cable #1 to expansion port of power station, the other end to Power Output of battery pack #1. Plug one end of cable #2 to Power Input of battery pack #1, the other end to Power Output of battery pack #2. Plug one end of cable #3 to Power Input of battery pack #2, the other end to Power Output of battery pack #3. 6 battery packs can be parallelized at most.

❸ After parallelization, press power button ⏻ of the power station to enable the power station and battery packs to show current capacity. The power station shows the paralleled quantity, and capacity is expanded.

❹ After parallelization, connect ports of the power station for charging or discharging (refer to clause 3.3, 3.4, 3.5 and 3.6).

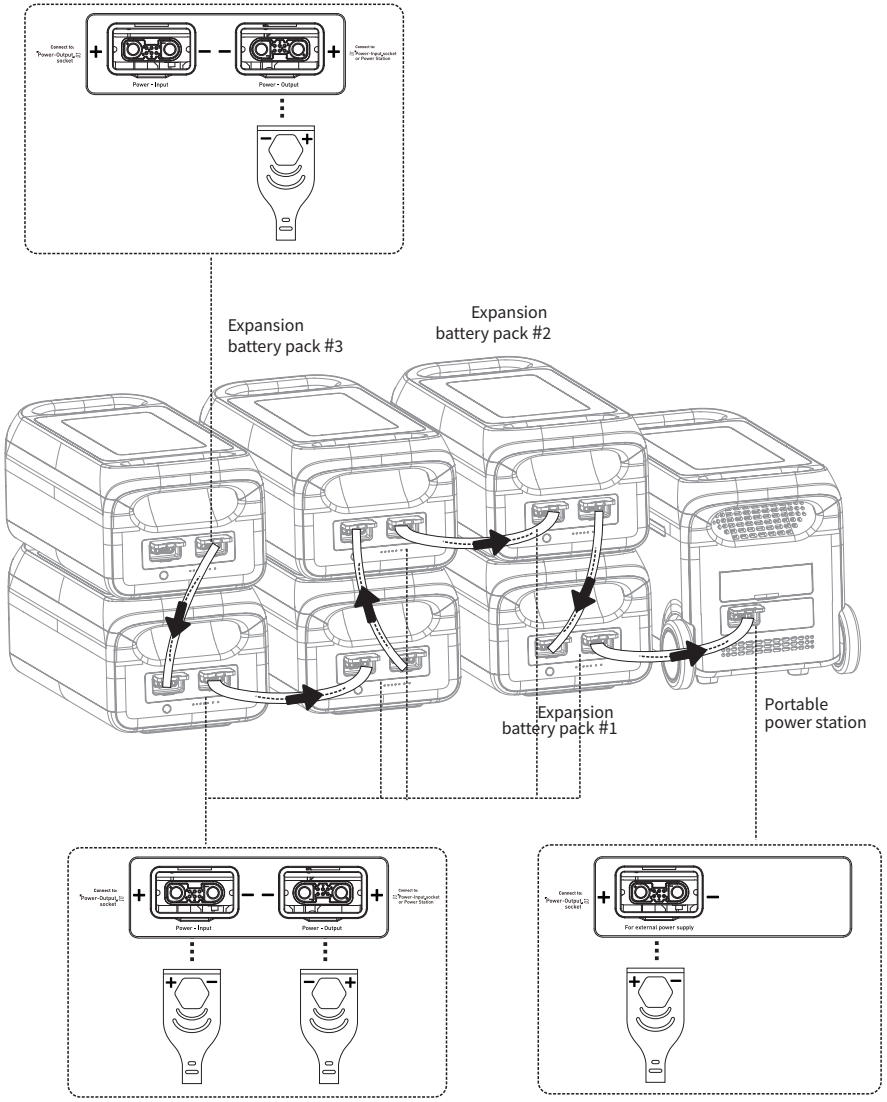

Remark: There are + and – symbols on battery packs and cables in case of reverse polarities.

3.8 APP

You can control and view information and data about this product by App.

Software download, search for [Smart Life] in the Google App Store or Apple App Store, download the software, register and open it or scan the QR code below to download. For detailed usage of the APP, please refer to the APP Operation Guide.

3.9 UPS function

This product supports the UPS function. You are connecting the power grid and the AC input port of this product through the AC charging cable; when connected to the mains, the appliance can use the AC output port of the product to work. At this time, it is in bypass mode (AC power from the grid, not the battery); when the grid suddenly loses power, the product can automatically switch to the battery-powered mode within 14mS, which is the inverter mode (the AC power comes from the battery, not the grid). This function does not support 0mS switching. Please do not connect it to devices that require high uninterrupted power supply, such as data servers and workstations, or use it after multiple tests to confirm whether it is compatible, and It is recommended to use only one device during use, and do not use multiple devices at the same time to avoid overload protection of the product. If the device does not operate normally or data is lost due to failure to follow the instructions, our company will not bear the corresponding responsibility.

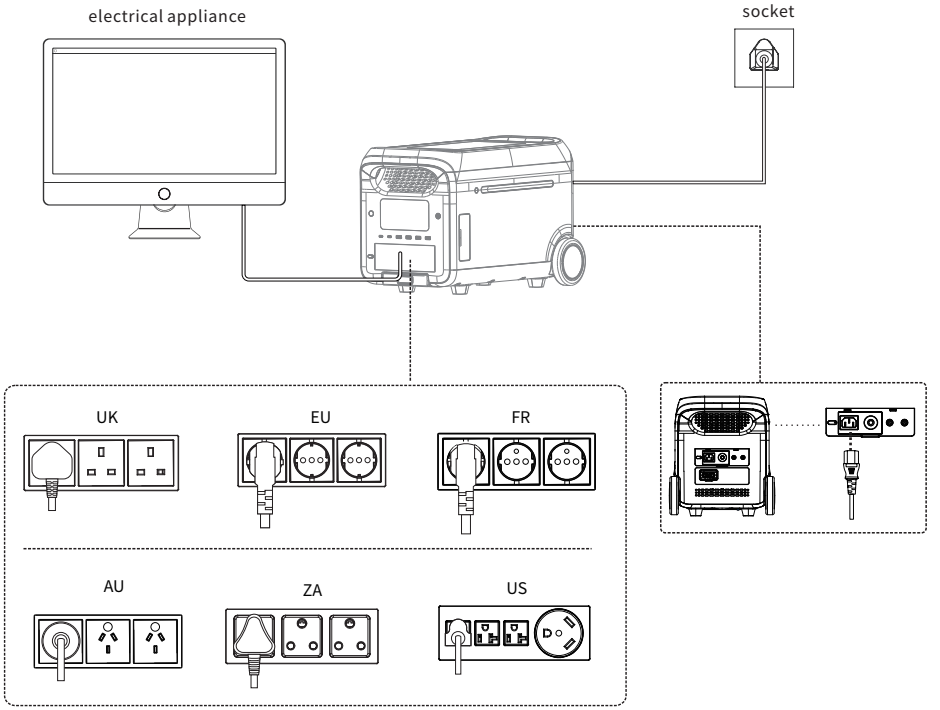

3.10 Anti-slip gloves

Two anti-slip gloves are wrapped in the front and rear handles to prevent slipping.

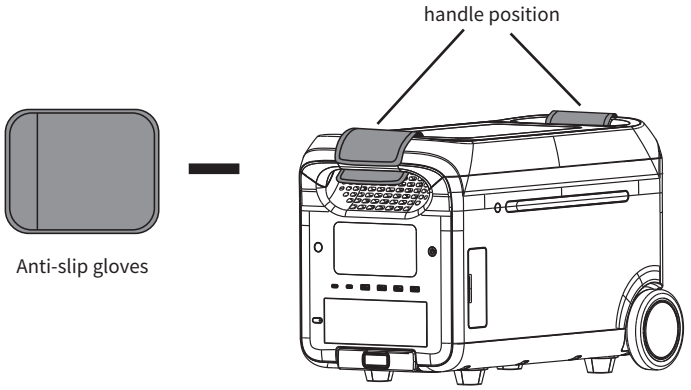

4. FAQs (Frequently Asked Questions)

1. What kind of battery is used?
Lithium iron phosphate battery ($LiFePO_4$).

2. What equipment can be connected to the AC output ports?
The AC output has high rating power and maximum power, which enables it to supply power to most household appliances. Suggest check the equipment power prior to connecting and make sure power of all equipment lower than rated power.

3. How to know the supply time?
Time shows in the LCD, which can be referred to for estimation for equipment with stable power consumption.

4. How to know it is charging?
When in charge, the LCD shows remaining charging time. The SOC flickers, and input power is shown.

5. How to clean the unit?
Clean the unit with a dry, soft and clean cloth or tissue.

6. How to store the unit?
Turn it off, and keep it in a dry and ventilated place. Do not expose it close to water. For long-term storage, charge and discharge every 3 months, i.e. discharge to 0% then charge to 100%, and then discharge to 48%~52%.

7. Can it be taken on board?
No.

5. Error messages & solutions

Icon		Fault Description	Solution
01 Error	Error code always on	Serious battery fault	Turn on and off, contact after sales if still not fixed.
02 Error	Error code always on	Battery cell voltage difference fault	Auto shutdown, fault will be cleared after reboot.
03 Error	Error code always on	BMS voltage fault	
Over 04 Error	High temperature icon always on Error code always on	Battery OTP (over temperature protection) fault	Auto shutdown, temperature recovery enables starting up.
Low 05 Error	Low temperature icon always on Error code always on	Battery UTP (under temperature protection) fault	
06 Error	Error code always on	Overcurrent/short circuit fault	Auto shutdown, fault will be cleared after reboot.
Over 07 Error	High temperature icon always on Error code always on	BMS board over temperature fault	Auto shutdown, delayed start.
08 Error	Error code always on	Pre-charge fault	Auto shutdown, fault will be cleared after reboot.
09 Error	Error code always on	Battery under voltage fault	Auto shutdown and charge, contact after sales if still not fixed after multiple charging failures.
10 Error	Error code always on	Abnormal parallelization	Check the connection cable. Contact after sales if still not fixed. Single power station function is not affected.
11 Error	Error code always on	Abnormal INV battery voltage	Auto recover after fault is cleared.
12 Error	Error code always on	Grid voltage or frequency fault	The fault is cleared when the grid returns to normal.
13 Error	Error code always on	Abnormal INV BUS voltage	Auto recover after fault is cleared.
14 Error	Error code always on	Abnormal INV output	
Overload 15 Error	Overload icon always on Error code always on	INV discharge overload	Remove over-power device. Auto recover after fault is cleared.
Overload 16 Error	Overload icon always on Error code always on	Charge overload	Auto recover after fault is cleared.
17 Error	Error code always on	INV Tz	
18 Error	Error code always on	INV input short	Fault will be cleared after reboot.
19 Error	Error code always on	INV output short	
Over 20 Error	High temperature icon always on Error code always on	MOSFET OTP fault	Auto recover after product is cooled down.

Icon		Fault Description	Solution
21 Error	Error code always on	Fan stop	Turn on and off, contact after sales if still not fixed.
22 Error	Error code always on	Discharge soft start fault	Auto recover after fault is cleared.
23 Error	Error code always on	Charge soft start fault	
Low 24 Error	Low temperature icon always on Error code always on	MOSFET UTP fault	Turn on and off, contact after sales if still not fixed.
25 Error	Error code always on	Anderson hardware OCP fault	Remove the Anderson charging port, auto recover after connecting Anderson and turn on.
26 Error	Error code always on	Anderson software OCP fault	Turn off output, manual recover after fault is cleared.
27 Error	Error code always on	DC input hardware overcurrent protection	Remove DC charge, auto recover after connecting DC and turn on.
28 Error	Error code always on	DC1 input software overcurrent protection	DC1 charging stops and will automatically resume after the fault is eliminated.
29 Error	Error code always on	DC2 input software overcurrent protection	DC2 charging stops and will automatically resume after the fault is eliminated.
30 Error	Error code always on	Car charger output/ DC5521 output Over current protection	Turn off output, manual recover after fault is cleared.
31 Error	Error code always on	PV output OVP (over voltage protection) fault	Stop PV. Auto recover after fault is cleared.
32 Error	Error code always on	DC1 input voltage overvoltage protection	Stop DC1. Auto recover after fault is cleared.
33 Error	Error code always on	DC2 input voltage overvoltage protection	Stop DC2. Auto recover after fault is cleared.
Over 34 Error	High temperature icon always on Error code always on	Anderson OTP fault	Turn off output, manual recover after fault is cleared.
Over 35 Error	High temperature icon always on Error code always on	DC1 input over temperature protection	Stop DC1. Auto recover after fault is cleared.
Over 36 Error	High temperature icon always on Error code always on	DC2 input over temperature protection	Stop DC2. Auto recover after fault is cleared.
Over 37 Error	High temperature icon always on Error code always on	Car charge output OTP fault	Turn off output, manual recover after fault is cleared.
38 Error	Error code always on	Abnormal communication	Turn on and off, or change operation environment. Contact after sales if still not fixed.
39 Error	Error code always on	Abnormal USB	Auto recover after removing abnormal USB.
40 Error	Error code always on	Abnormal type C	Auto recover after removing abnormal type C.
43 Error	Error code always on	The battery voltage is too low. The battery is broken	Contact after-sales processing.

If there is a warning occurs during the use of this product, and the warning icon still does not disappear after restarting the device, please stop using it immediately (do not try to charge or discharge).

If none of the above information can solve problem you encounter, please contact the customer service for consultation.

Note: DC1 refers to PV1 and Car Charger1. DC2 refers to PV2 and Car Charger2. Both PV and Car Charger are DC input sharing the same DC Ports.

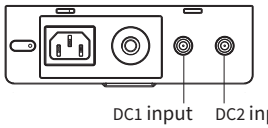

6. What's in the box

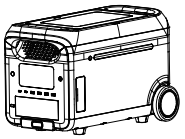
Power station

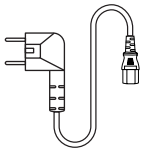
AC cable

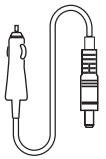
Car charge cable

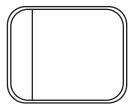
Anti-slip gloves

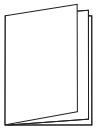
User manual

7. Maintenance

• It is recommended to use or store power station under 20~30°C ambient temperature. Keep it away from water, heater and metal parts.

• For long-term storage, charge and discharge every 3 months, i.e. discharge to 0% then charge to 100%, and then discharge to 48%~52%.

• For safety, do not store power station with temperature above 45°C or below -10°C.

• If the capacity is lower than 1%, please charge to 60%. Long-term storage with serious power shortage will cause irreversible damage to the cell and shorten the service life of the product.

• If the capacity is seriously insufficient and idle time is too long, the product will enter deep sleep mode, and the product can only be used after being charged.

• After charging or discharging this product, you must wait for more than 30 minutes before using it.

8. Disclaimer

• The product has a built-in battery management system, which has protections such as overcharge, overdischarge, overcurrent, short circuit, high and low temperature, and abnormal communication. During the use of this product, protection may occur and cause output interruption. Power supply to special equipment, such as medical equipment, server, the indirect loss caused by accidental power failure has nothing to do with the company; all accidents caused by illegal use, self-dismantling, and man-made damage have nothing to do with the company.

• Before using the power station, please read this user manual to ensure understanding and proper use. After reading the user manual, please keep it well for future reference. Improper operation may cause serious injury to yourself or others, or result in product damage and property loss. Once using power station, you are deemed to have understood and accepted all terms and contents herein. Users promise to be responsible for their actions and all consequences arising therefrom. We shall not be liable for any loss arising from user' s not following this user manual.

• In compliance with laws and regulations, the company reserves the right of final interpretation of this document and all related documents of this product. Subject to update, revision or termination without prior notice, please visit the official website for the latest product information.

FCC Statement

This device complies with Part 15 of the FCC Rules. Operation is subject to the following two conditions:

(1)This device may not cause harmful interference.

(2)This device must accept any interference received, including interference that may cause undesired operation.

2. Changes or modifications not expressly approved by the party responsible for compliance could void the user' s authority to operate the equipment.

Note:This equipment has been tested and found to comply with the limits for a class B digital device,pursuant to Part 15 of the FCC Rules. These limits are designed to provide reasonable protection against harmful interference in a residential installation.

This equipment generates uses and can radiate radio frequence energy and, if not installed and used in accordance with the instructions, may cause harmful interference to radio communications. However, there is no guarantee that interference will not occur in a particular installation. If this equipemt does cause harmful interference to radio or television reception, which can be determined by turning the equipment off and on, the user is encouraged to try to correct the interference by one or more of the following measures:

• Reorient or relocate the receiving antenna.

• Increase the separation between the equipment and receiver.

• Connect the equipment into an autlet on a circuit different from that to which the receiver is connected.

• Consult the dealer or an experienced radio/TV technician for help.

The device has been evaluated to meet general RF exposure requirement, This equipment should be installed and operated with a minumum distance of 20 cm between the radiator and your body.

ISED Statement

This device contains licence-exempt transmitter(s)/receiver(s) that comply with Innovation, Science and Economic Development Canada' s licence-exempt RSS(s). Operation is subject to the following two conditions:

This device may not cause interference.

This device must accept any interference, including interference that may cause undesired operation of the device.

This equipment should be installed and operated with a minimum distance of 20 cm between the radiator and your body.

Le présent appareil est conforme aux CNR d'Industrie Canada applicables auxappareils radio exempts de licence. L'exploitation est autorisée aux deux conditions suivantes :

(1)l'appareil ne doit pas produire de brouillage, et (2) l'utilisateur de l'appareil doit accepter toutbrouillage radioélectrique subi, même si le brouillage est susceptible d'en compromettre lefonctionnement. Cet équipement doit être installé et utilisé avec une distance minimale de 20 cm entre le radiateur et votre corps.